PETRA SOAP DISPENSER

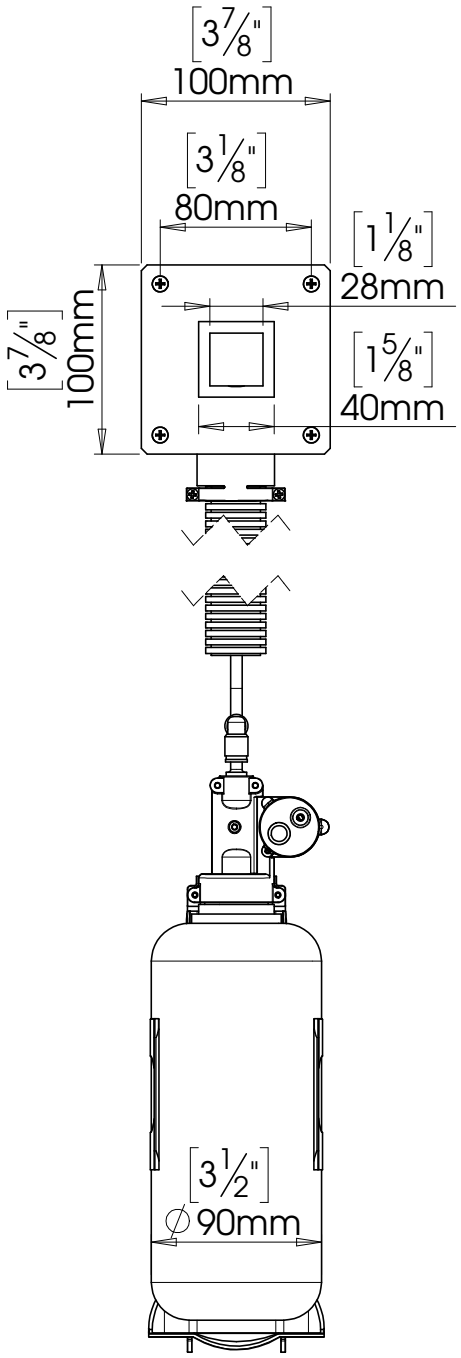

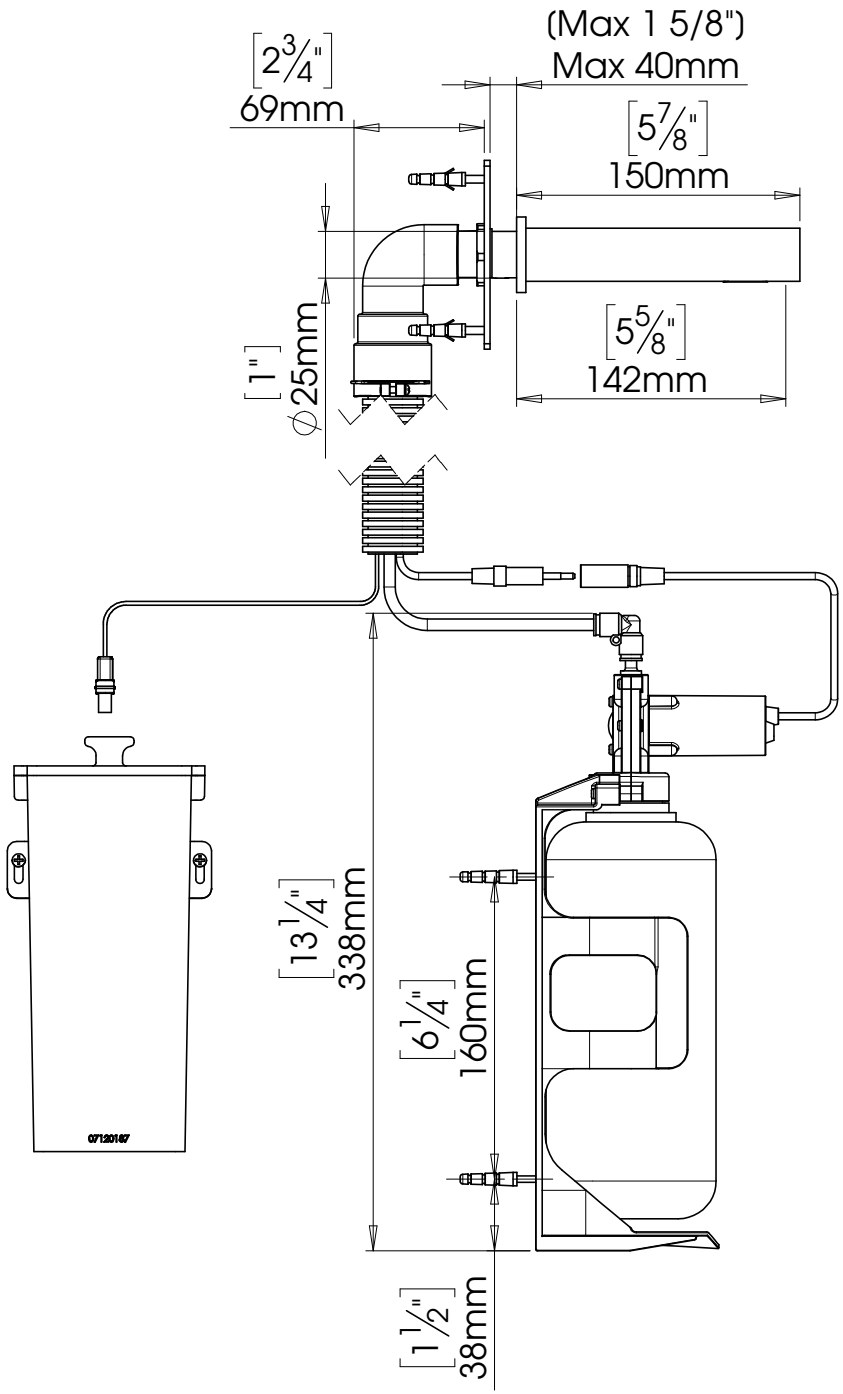

KASSEL